BIG 4000 THREE-PHASE - BIG 1500 FAST

GEARMOTOR IN OIL BATH FOR INDUSTRIAL SLIDING GATES WITH MAX. 4000 KG WEIGHT

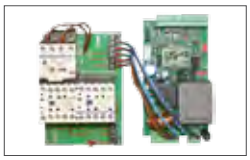

GATE 1 DG TRIFASE

- Robust, cataphoresis- treated polyester paint sheet housing for heavy-duty applications of industrial type
- Mechanical torque controller in oil bath (optional version RT)
- Special heat treatment of all internal parts for max. industrial operation resistance
- On request BOX 6000 special version (for sliding gates with max. 6000Kg weight)
- Electrobrake for optimisation on limit switches position
- Module 6 galvanized rack (pinion Z16)
- On request special version module 4 (only version with inverter or torque adjuster)
- BIG 4000 inverter with possibility of slowdown and reverse on obstacle

Release with personalized key

Electro brake

Stainless steel cover (option)

Sliding Gates

CODE	NAME	MAX GATE WEIGHT (KG)	MAX LEAF LENGTH (M)	MAX CYCLES/ HOUR	PCS PER PALLET
NEW 11115080*	**BIG 1500 FAST inverter** 230V (0,60 m/sec) FAST	1500	10	60%	8
11115045	**BIG 4000** (230V- 380V mod.6) Three-phase with digital control GATE 1 DG Threephase	4000	14	60%	8
11115050*	**BIG 4000 INVERTER 380V** (mod.6) with inverter and digital control GATE 1 DG Threephase	4000	14	60%	8
11115075*	**BIG 4000 INVERTER 220V** (mod.6) with inverter and digital control unit GATE 1 DG Threephase	4000	14	60%	8
11115055*	**BIG 4000 RT 230V - 380V** (mod.6) with torque adjuster, inverter and digital control unit GATE 1 DG Threephase	4000	14	60%	8
11115100*	**BIG 6000 FM** (Control unit not included) * Use GATE 1 DG Threephase	6000	18	60%	8

*Possibility to use module 4 pinion

ACCESSORIES •

16101106

PZ12
Pinion Z 12 mod. 6

16101070

PZ24M4
Pinion Z 24 mod. 4
for BIG 4000 RT or Inverter

23101125

Safety microswitch kit on the door

65000020

OILGL (5 L)
yellow oil

12711160

Stainless steel cover (option)

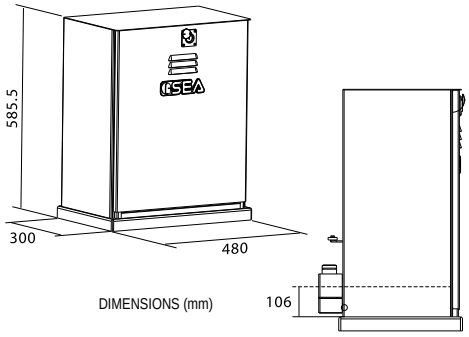

DIMENSIONS (mm)