Mercury 400/600/800 Kg

GEARMOTOR FOR RESIDENTIAL (230V VERSION) OR SEMI-INTENSIVE USE (24V VERSION)

- Die-cast aluminum body with external housing with innovative design
- Encoder (obstacle detection sensor) for max. operation safety (optional 230V version)
- Electronic anti-crushing clutch
- Mechanical or magnetic limit switch (MAG version)
- Optional micro-switch on release lever
- Adjustable slowdown in opening and closing
- Emergency batteries and solar panel KIT SUNNY for recharge can be applied
- In option batteries 1,2 Ah (code 12715295)

Led light application on all models possible (optional)

Release system through metal lock

Special cataphoresis treatment (600 and 800 versions)

CODE	NAME	MAX GATE WEIGHT (KG)	MAX LEAF LENGTH (M)	MAX CYCLES/ HOUR	PCS PER PALLET	(PCS)	(PCS)
11304000	**MERCURY 400 G1** with GATE 1 DG control unit (black cataphoresis base)	400	4	20	30	10	20
11304005	**MERCURY 400 24V** with USER 1 - 24V DG control unit (black cataphoresis base)	400	4	30	30	10	20
11304050	**MERCURY 400 E*** with SLIDE DG control unit	400	4	20	30	10	20
11304100	**MERCURY 600 G1** with GATE 1 DG control unit (black cataphoresis base)	600	6	20	30	10	20
11304105	**MERCURY 600 24V** with USER 1 - 24V DG control unit (black cataphoresis base)	600	6	30	30	10	20
11304205	**MERCURY 800 G1 Oil** with GATE 1 DG control unit (black cataphoresis base)	800	6	20	30	10	20
11304210	**MERCURY 800 24V Oil** with USER 1 - 24V DG control unit (black cataphoresis base)	800	6	30	30	10	20
11304225	**MERCURY 800 E*** with SLIDE DG control unit	800	6	20	30	10	20

ACCESSORIES •

23106305

BAT7 (7AH)
Battery kit with box

11203005

ENC
kit Encoder for MERCURY 400 (230V)

16101116

PZ13T Pinion Z13 for MERCURY

16101089

PZ20 Pinion Z20 for MERCURY

12715275

Microswitch on release lever for stop function

23101105

ESUN
Solar panelcard and battery -charger

23106370(*)

Kit SUNNY
20W solar panel + control unit + battery

12710645

LED
light to be inserted in carter

12710677

DIN cylinder with variable coding

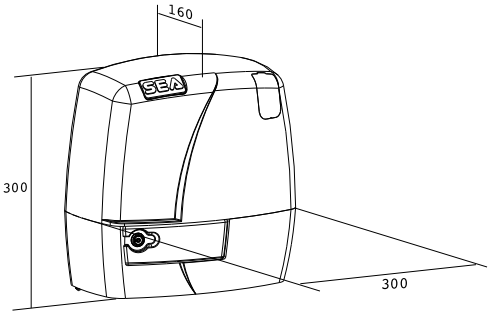

DIMENSIONS (mm)

For versions with magnetic limit switch write "MAG" after the code * with SLIDE DG control units