How **quiet**… **loud** can be.

Visual privacy and acoustic fencing system

ThomTek® Perilux

ThomTek® Perilux

MADE IN
GERMANY

Noise
reduction up to
29 dB

ENJOYING THE NICE SIDES OF LIFE

WE WANT TO PROTECT YOUR HEALTH AND WELLBEING

The new visual privacy and acoustic fencing system

The **ThomTek**® Perilux was developed as a sound-proofing structure to significantly reduce sound transmission and to protect against noise pollution, which can be the cause of hearing damage, stress, high blood pressure and insomnia.

In addition to protecting the living area from noise pollution, the **ThomTek**® Perilux is an attractive part of the landscape and fits within any architectural environment. The design of the fence system offers an effective barrier to road traffic noise as well as construction, industrial and commercial noise. Because of its durability and high level of stability in all weather conditions, property values are enhanced and the quality of life for the residents is improved.

See for yourself the high-quality materials, the attractive appearance, and the significant reduction in ambient noise levels. Improve your quality of life with the **ThomTek**® Perilux and look forward to more peace and quiet in your home.

ThomTek® Perilux

SO QUIET …

Noise reduction by up to 29 dB with your **ThomTek**® Perilux.

30 dB	Whispering
50 dB	Refrigerator
60 dB	Normal conversation
70 dB	Lawnmower
75 dB	Normal traffic noise
85 dB	Limit level for noise in the workplace
90 dB	Lorry
100 dB	Pneumatic hammer
110 dB	Power saw
120 dB	Pain threshold, powerful thunder
130 dB	Jumbo jet starting nearby
150 dB	Immediate, irreparable damage to hearing

NATURAL AND INDIVIDUAL

ANTHRACITE

BLACK BROWN

FOREST GREEN

BROWN

NATURAL

GREY

BRICK RED

SEA BLUE

WPC profiles

WPC stands for “wood polymer composite”. It is comprised of a combination of wood fibres and thermoplastic bonding agents, which are extruded and fused together.

At 70% domestic woods, the wood content is very high. The colours are generated by the addition of environmentally friendly coloured pigments.

Steel profiles

The hot-dip galvanised steel profiles are powder coated in a way that is totally environmentally friendly. Electrostatically charged and solvent free powders are applied to the steel by spray guns and then thermally cured. Optimal adhesion to the zinc surface is guaranteed with several passes.

The colours shown for the WPC and steel profiles may deviate from the original. Colour samples are available on request.

Elegance
Graphite

Elegance 9005
(Black)

Elegance 7016
(Dark Grey)

Elegance 8017
(Dark Brown)

Gold

Elegance 6009
(Forest Green)

Elegance
Brown Auburn

Elegance
Auburn

Metallic Silver

This is a selection of the most popular colours. Other colours are available on request. Colour samples are available on request.

ThomTek® Perilux

OUR NEW PRODUCTS

Our website www.**ThomTek**-Perilux.de

Visit our website for further information about the **ThomTek**® Perilux. Documents are available for download on our website, but should you require any further information please do not hesitate to contact us.

Scan this QR code with your smartphone to go to the **ThomTek**® Perilux website.

ThomTek® Perilux

CLEANING MADE EASY

The **ThomTek**® Perilux is largely maintenance free

WPC profiles are easy to clean with water. If very dirty, a pressure washer (no steam jet) may be used with a maximum pressure of 80 bar and a minimum distance of 30 cm from the WPC profile. Do not use cleaning agents containing solvents. Because of the polymer proportion, the WPC profiles are largely maintenance free. Painting or oiling to prolong durability is unnecessary.

GATES AND DOORS

The **ThomTek**® Perilux can also be installed and delivered with a gate or door.

Front view of gate

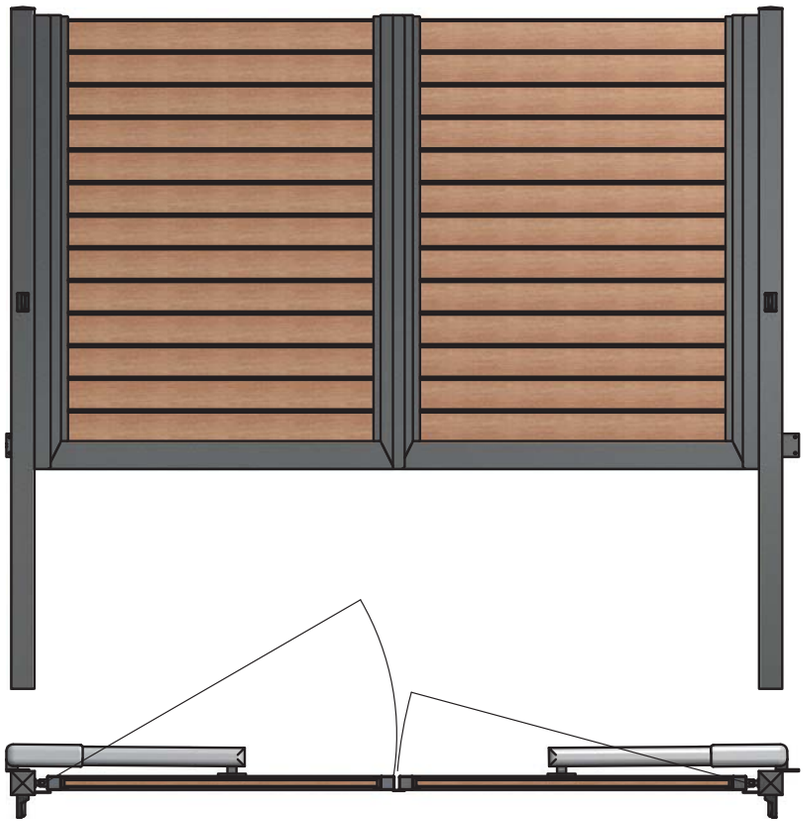

Rear view of gate

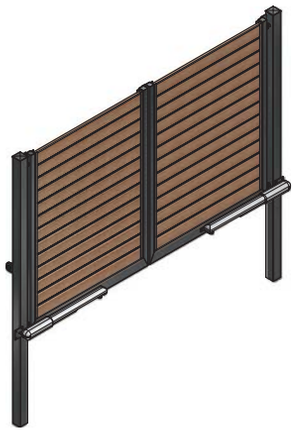

Front view of door

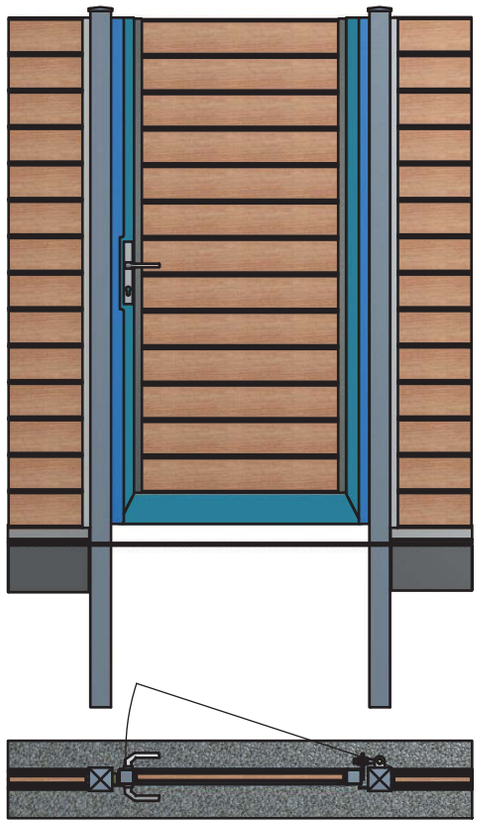

Rear view of door

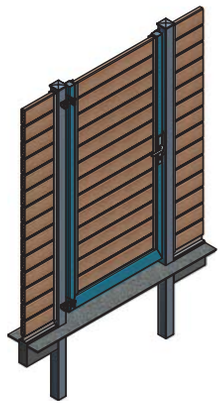

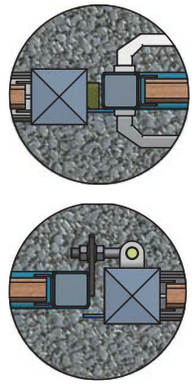

Top view of gate

Top view of door

Details of door

ThomTek® Perilux

Three-metre high **ThomTek**® Perilux to protect a residential district in Duisburg from the noise of a neighbouring outdoor restaurant.

The **ThomTek**® Perilux on a roof in Aachen as a acoustic wall for a ventilation system (illustration left) and at a Kindergarten in Eschweiler for a heat pump (illustration below).

CERTIFIED NOISE REDUCTION

Soundproofing solutions for urban requirements

With the aid of the **ThomTek**® Perilux, noise is reduced by 26 dB in accordance with DIN EN-1793-2 and by 29 dB in accordance with ISO 10140-2.

(Test report PB 4.2/11-339-1 dated 28.10.2011)

Noise reduction up to
29 dB

SEEN IT BEFORE?

The **ThomTek**® Perilux and its installation

Get a picture of the **ThomTek**® Perilux and its simple installation. We present the specifications and advantages to you in our product film (German). Furthermore, we can discuss the planning, installation and various options for our acoustic and visual privacy fence.

Scan this QR code with your smartphone to go to the **ThomTek**® Perilux installation film (German).

MADE IN
GERMANY

SIMPLE AND VARIABLE

The **ThomTek**® Perilux is simple to install

Installation of the **ThomTek**® Perilux is simply brilliant. The post spacing is variable up to a maximum of 3 m. The finished height can be selected as required. The dimensions of the posts and foundations are determined by the finished height above ground level.

The individual grading is dictated by the soundproofing profile width, and height differences are facilitated by the infinetely variable installation of the U-fixing-rails depending on the ground conditions. The soundproofing profiles are cut to length with standard woodworking tools and require no further processing. The use of compribands allow floating and vibration-free assembly. The fence installation must be adjusted so that the WPC profiles do not touch the soil/ground.

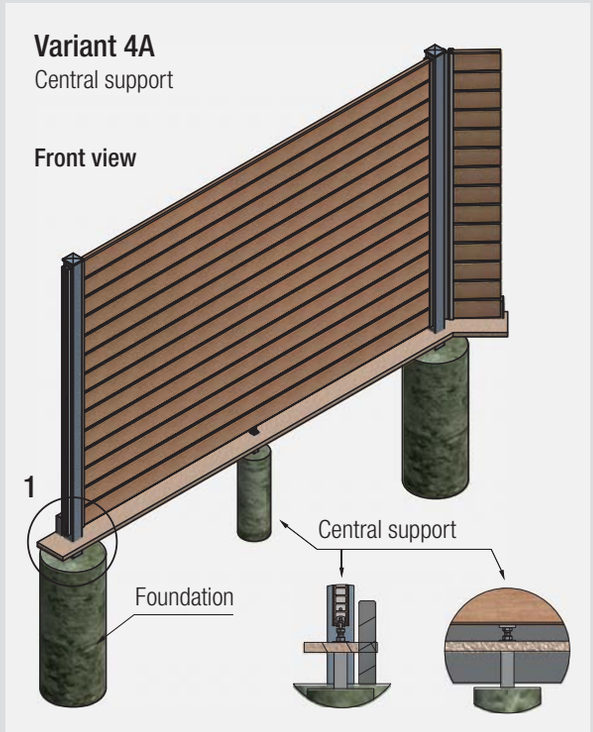

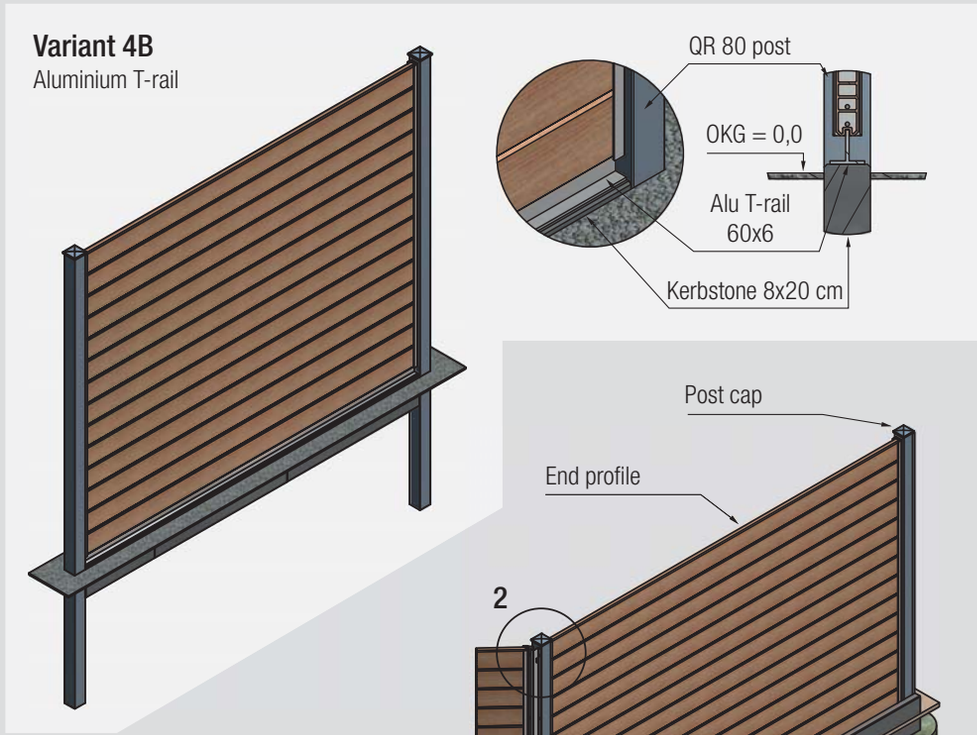

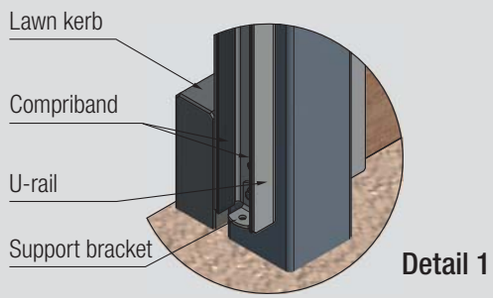

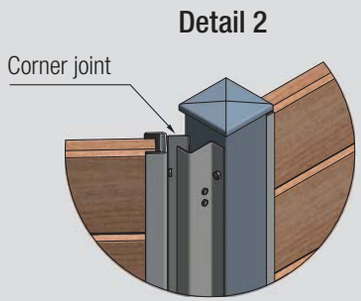

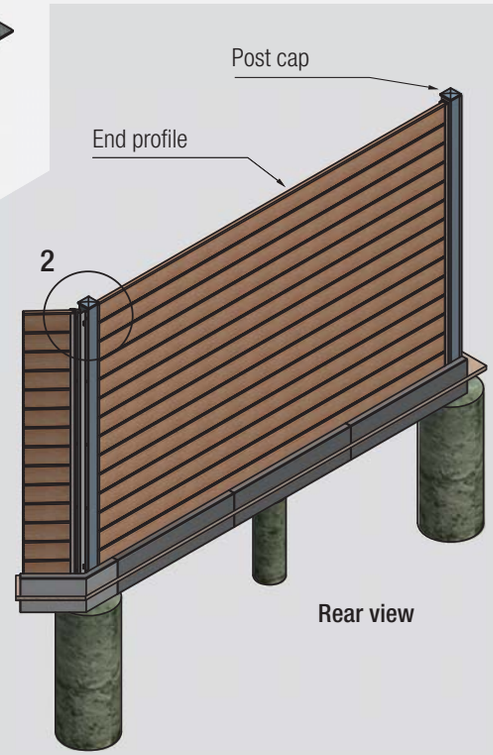

Installation instructions

1. POSITIONING

ThomTek® Perilux offers the advantage that the posts can be positioned as required. Please note: Do not exceed the **maximum axis size** of 3105 mm. Standard lengths of **ThomTek**® profiles: 3000 mm + 2500 mm. The profile is not dimensionally accurate and must therefore be cut to size on site. Processing is carried out using standard woodworking tools.

Reworking of the profiles is **not** necessary. The distances can be positioned evenly in sections.

2. FOUNDATION

After positioning, begin with the **foundation**. System height up to 2380 mm individual foundation in quality C20/25, grain size 0 – 16 mm, earth-moist.
Foundation size: d = 400 x 1000 mm, post installation in the centre of the point foundation.

3. HEIGHT COURSE AND GRADIENT

Installation is performed flush and at the correct height. For the **height course**, please note: **Stepping** of the fence is possible in any size with the U-fixing-rails. For gradients >5 %, reduce the maximum standard distance such that the steps do not exceed 150 mm.

4. LAWN KERBSTONE

As a condition for soundproofing and for long extended durability, the **ThomTek**® Perilux profiles should not be embedded in the ground. There are two variants:

- **A** Installation of a lawn kerbstone parallel to the fence axis and a central support.
- **B** Installation of a lawn kerbstone between the posts in the fence axis and a continuous aluminium T-rail.

5. SUPPORT POST

To prevent the profiles from sagging in the case of a field length of >1500 mm, a central support is installed in the field centre/axis in the case of **variant A**.

Foundation size = 20 x 20 x 40 cm
The ground socket is fitted with an adjustment mechanism after the concrete hardens and before installation of the **ThomTek**® profiles.

In the case of **variant B**, the lower **ThomTek**® profile is attached to the bar of the aluminium T-rail over the entire length.

6. FIXING RAILS

The U-fixing-rails are now installed at the correct height and centrally between the posts. The U-rails matching the system heights are screwed into the holes provided for this on the posts, using self-tapping stainless steel facade fixing screws.

- **A** In the same process, support brackets are screwed on at the very bottom as profile supports.
- **B** Support brackets are not required.

7. CUTTING

The **ThomTek**® Perilux profiles are not cut to size. The linear dimension is based upon the actual clear distance between the posts.
The profile must be 25 mm shorter, so that a length expansion is possible.

8. COMPRIBAND

Compriband is stuck in from both sides.

9. INSERTION OF THE PROFILES

Insertion of the profiles follows. Please work quickly, as the compriband expands to fulfil its function. This process is dependent upon weather conditions; the cooler it is, the longer the expansion will take. However, the time is sufficient to insert the profiles carefully.

10. CORNERS

Corners and fence courses that deviate by more than approx. 8° from an angle of 90°/180° are set with the specially developed, variable corner joint.

11. WALL CONNECTIONS

The wall connections or combinations with other fence systems, e.g. such as gabion walls, can be completed with the use of U-rails.

Customer references

"It was important to me that the length of the posts could be 2.5 m. I liked it very much. Since we have had **ThomTek**® Perilux, I don't really notice that the people go behind the fence. We are happy about our new fence. All our friends and neighbors are excited about this system."

Mr. Billen, Mönchengladbach

"We enjoy the fence every day. This is something special. All our friends and relatives are enthused about it. This fence is luxurious."

Ms. Schlossarek, Hückelhoven-Ratheim

"We live directly at the heavy traffic cycle path. The hedge we have there didn't provide us with the good noise protection. Our friends recommended us to install **ThomTek**® Perilux . We tested the noise reduction at the test fence and finally decided to mount the fence. If somebody cries, we cannot fail to hear it. But we are very happy with the noise reduction"

Ms. Müller-Steffan, Korschenbroich

www.**ThomTek**-Perilux.de

TTP-20160920-20SV01EN-MT Technical changes, misprints and errors are reserved.